Since 1898

CONSEW®

CONSOLIDATED SEWING MACHINE CORP.

INDUSTRIAL SEWING & CUTTING EQUIPMENT

PARTS LIST

&

INSTRUCTION BOOK

104-10T

Since 1898

CONSEW®

CONSOLIDATED SEWING MACHINE CORP.

INDUSTRIAL SEWING & CUTTING EQUIPMENT

400 VETERANS BLVD, CARLSTADT, NJ 07072

From the library of: Superior Sewing Machine & Supply LLC

From the library of: Superior Sewing Machine & Supply LLC

INDEX

1. SPECIFICATIONS 1
2. DESCRIPTION 1
3. SPEED 1
4. TO OIL THE MACHINE 2
5. NEEDLES, NIPPLES AND THREAD 3
6. TO REMOVE, REPLACE AND SET NEEDLE AND NIPPLE 4
7. TO THREAD THE MACHINE 6
8. LEARNING TO OPERATE THE MACHINE 9
9. TO OPERATE THE MACHINE 9
10. TO REGULATE THE PRESSURE ON THE PRESSER FOOT 10
11. TENSIONS 10
12. TO ADJUST THE LENGTH OF STITCH 11
13. TO REGULATE THE PRESSURE ON THE NIPPLE 11
14. THE LOOPER 12
15. TO SET THE LOOPER 13
16. TO ADJUST THE NUMBER OF THE BRAIDING 13
17. TO ADJUST THE TENSION OF THE BRAIDING 14
18. RAY STITCH 14
19. PILE OR MOSS STITCH 15

From the library of: Superior Sewing Machine & Supply LLC

From the library of: Superior Sewing Machine & Supply LLC

1. SPECIFICATIONS

Stitch Specification	:	Single Thread, Chainstitch
Speed	:	800 stitches per minute
Feed	:	Universal Feed Movement
Stitch Length	:	Maximum 5 m/m
Presser Foot Lift	:	7 m/m
Needle Bar Stroke	:	14 m/m
Needle Used	:	System 137 x 1 (Chainstitch) 137 x 1 SM (Moss Stitch)
Motor	:	200W, Single or Three Phases, 4 Poles, Clutch

2. DESCRIPTION

TREASURE MODEL ES-1114-10 makes the braiding stitch and also can make the single thread chainstitch, the tape attaching, the ray stitch and the pile or moss stitch. It is designed for ornamenting or embroidering ladies' cloaks and suits, millinery, uniforms, draperies, table covers, etc.

The thread may be of cotton, wool, worsted, silk, metal and other threads of similar adaptability. A large variety of fabrics can be embroidered, ranging from fine chiffon to china silk and cloth.

The usual method of producing embroidered designs is to follow a pattern that has been perforated, stamped or traced on the fabric, but with practice the operator can produce embroidery designs without premarking the fabric.

3. SPEED

When first operating this machine, the best results can be obtained by running the machine approximately 800 stitches per minute. The speed can be increased as the operator becomes more proficient and the nature of the work permits.

4. TO OIL THE MACHINE (Figs. 1, 2, 11 & 12)

To insure easy running and prevent unnecessary wear of the parts which are in movable contact, the machine requires oiling.

Oil should be applied to the places designated by unlettered arrows in Figs. 1,2, 11 and 12.

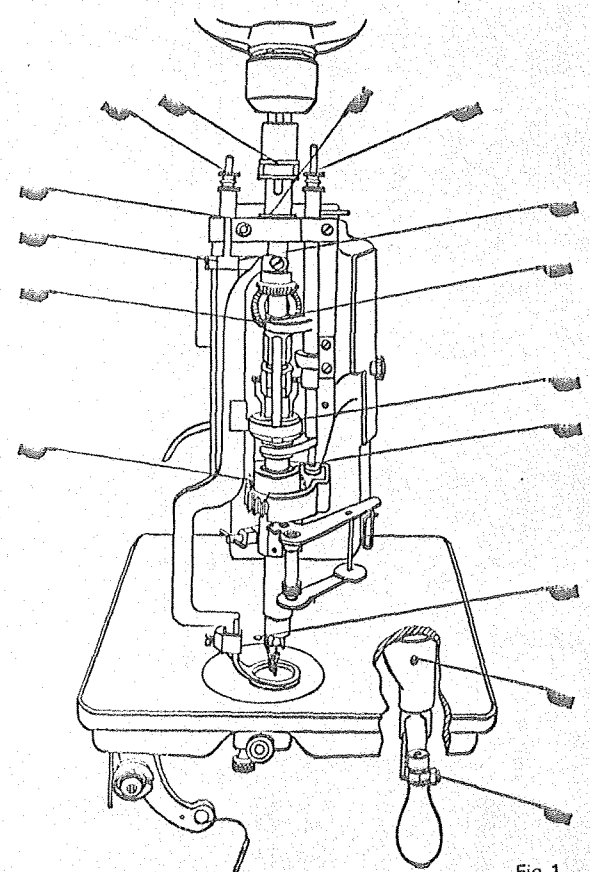

Fig. 1

From the library of: Superior Sewing Machine & Supply LLC

From the library of: Superior Sewing Machine & Supply LLC

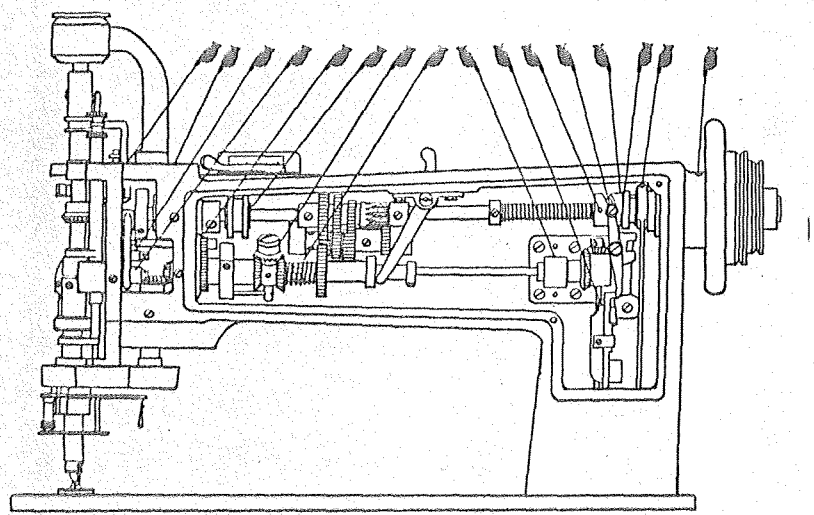

Fig.2

Fig. 2 shows the arm cover removed for the purpose of oiling. This arm cover can be removed after taking out thumb screw , Fig. 10. If the machine is used continuously, oil should be applied at least once each day.

5. NEEDLES, NIPPLES AND THREAD (Fig. 3)

Needles for TREASURE MODEL ES-1114-10 are system 137 x 1 (Catalogues No. 5901) and are available in sizes from 1 to 12. These needles have hooks similar in appearance to those of hand crochet needles.

The needle must be selected according to the thickness and the style of the thread to be used. The thread must not only fill the opening of the hook in the needle but must slide freely therein.

To correspond with the needle used in the machine a suitable nipple must be selected, as the needle in forming the stitch has to operate through the nipple. The needle must fit in the nipple and slide freely without side play. Nipples are available in size numbers similar to those of the needles, and for general work the number of the nipple should be the same as that of the needle.

The nipples for TREASURE ES-1114-10 are available in the following kinds, as per Fig. 3.

ⓐ : For chainstitch and moss stitch
ⓑ : For tape attaching
ⓒ : For braiding stitch and ray stitch

The thread may be of cotton, wool, worsted, silk, metal and other similar thread.

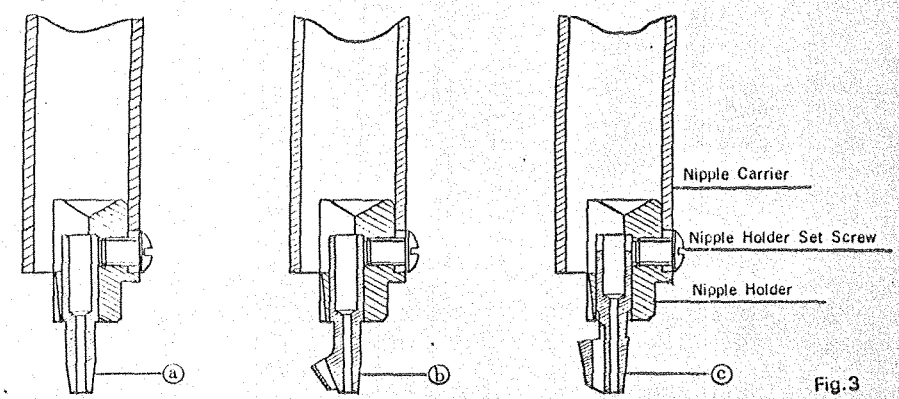

Fig.3

6. TO REMOVE, REPLACE AND SET NEEDLE AND NIPPLE (Fig. 4

When it is necessary to change the needle and nipple on the machine, first select another needle and corresponding nipple. Then lower the presser foot lifter Ⓓ, loosen screw Ⓑ and remove needle Bar Ⓐ and needle from top of machine. Remove nipple holder Ⓒ, loosening screw by screwdriver.

Select the correct needle hole in needle plate Ⓓ.

NOTE: The needle hole should be slightly larger than the needle, so that the needle, when laid around the needle, will have sufficient space to pass without touching the sides of the needle hole.

From the library of: Superior Sewing Machine & Supply LLC

From the library of: Superior Sewing Machine & Supply LLC

Loosen thumb screw Ⓛ and turn plate Ⓓ until correct needle hole is in line with needle, then tighten thumb screw Ⓛ.

Next, insert the selected nipple Ⓝ into the lower part of nipple holder Ⓞ and tighten screw securely with the screwdriver. Insert the nipple holder Ⓞ into the nipple carrier (Fig. 3) and tighten screw securely. Screw selected needle into needle bar Ⓐ and tighten with pliers provided. Replace needle bar Ⓐ down into sleeve and adjust its height so that the fabric to be embroidered can just pass under the point of the needle.

Be sure handle Ⓚ is as far to the front as possible and that the hook of the needle faces the front. Then tighten screw Ⓑ, which also should face the front.

NOTE: Do not tighten screw Ⓑ except when needle bar Ⓐ is in its place. If the screw is tightened when needle bar Ⓐ is not in its place, needle bar operating collar is transformed and needle bar does not enter into the collar.

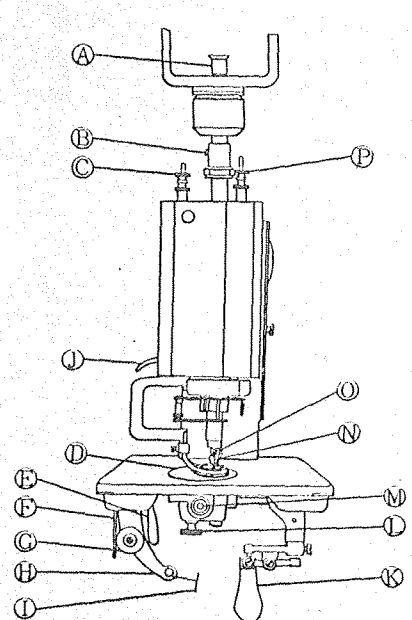

Fig. 4

Ⓐ: Needle Bar
Ⓑ: Needle Bar Operating Collar Set Screw
Ⓒ: Presser Foot Slide Bar Thumb Screw
Ⓓ: Needle Plate
Ⓔ: Tension Regulating Lever
Ⓕ: Tension Regulating Plate
Ⓖ: Tension Complete
Ⓗ: Tension Bracket
Ⓘ: Tension Controller Spring
Ⓙ: Presser Foot Lifter
Ⓚ: Stitch Rotating Hand Lever Handle
Ⓛ: Needle Plate Thumb Screw
Ⓜ: End of Looper Shaft
Ⓝ: Nipple
Ⓞ: Nipple Holder
Ⓟ: Nipple Carrier Thumb Screw

7. TO THREAD THE MACHINE (Figs. 5, 6 & 7)

1) For the thread (Figs. 5 & 6)

Place the cone of thread in a convenient position on the floor.

Three thread eyelets are furnished with the machine. These eyelets should be fastened to the underside of the table as shown at ❶, ❷ and ❸, Fig. 5. Eyelet ❶ should be located directly above the cone of thread.

Pass the thread up from the cone and through eyelets ❶, ❷ and ❸, then through hole ❹, over between tension discs ❺, through thread controller spring ❻. Turn handle Ⓐ, Fig. 6 to the front or slightly to the left, raise presser foot and insert threading wire Ⓑ in the forward hole ❼ of needle plate. With the left hand, catch thread on hook of threading wire Ⓑ and draw wire and thread up through hole of needle plate. With the left hand, hold end of thread with a slight tension.

From the library of: Superior Sewing Machine & Supply LLC

From the library of: Superior Sewing Machine & Supply LLC

With the right hand, turn handle Ⓐ straight to the left, having started the machine, quickly bear down and up on handle Ⓐ so the needle will pick up the thread for one stitch. Keep handle Ⓐ in same position and with the threading wire Ⓑ, draw thread directly toward you, laying end of thread loosely on needle plate after it comes up through needle hole.

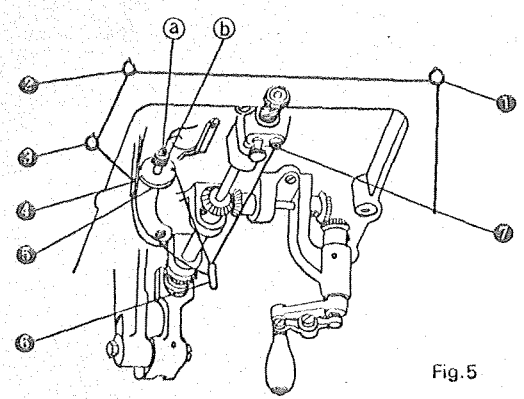

Fig.5

2) For the cord (Fig. 7)

Wind the cord ❶ on the cord spool ❷, using the spool winder spindle on the pulley. Place it on the cord spool bracket ❸. Insert the cord into the top of needle bar ❹ with the threading wire (large) ❺ and pass it below the end of nipple carrier 6, then through to the hole of the nipple ❼.

3) For the braid (Fig. 7)

Wind the braid ❽ on the braid spool ❾, using the spool winder spindle on the pulley. Place it on the braid spool bracket ❿. Pass the braid through the braid guide ⓫ of the bracket ⓬ and through the hole ⓭ of the braid leader rod and the hole ⓮ of the braid leader bracket, then through the forward hole ⓯ of the braid leader guide.

Now the machine is ready for operation.

Fig.6

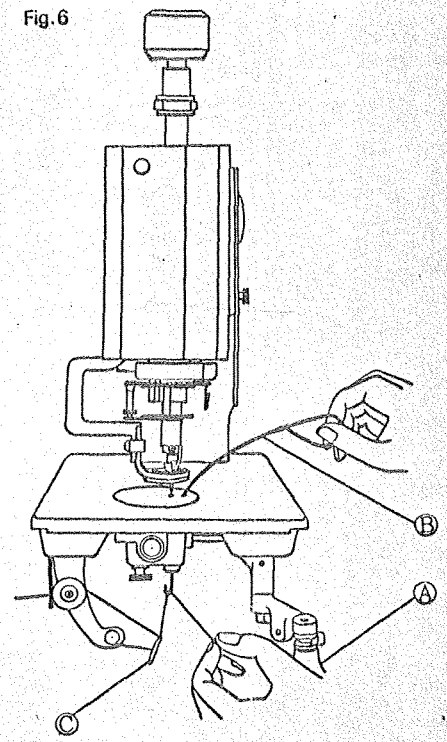

Fig.7

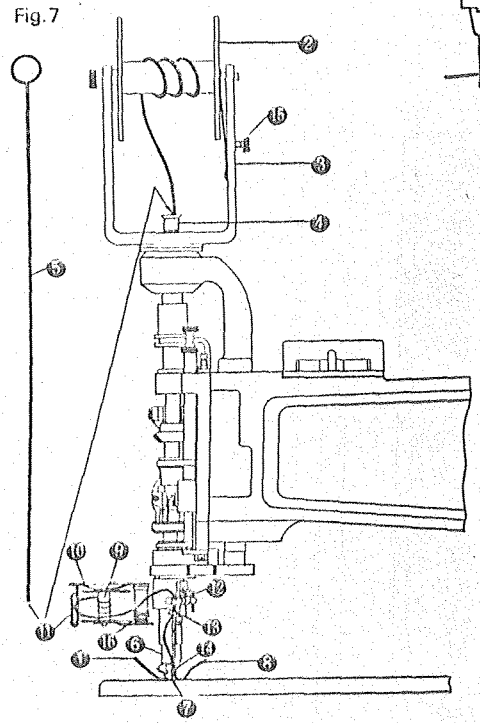

From the library of: Superior Sewing Machine & Supply LLC

From the library of: Superior Sewing Machine & Supply LLC

8. LEARNING TO OPERATE THE MACHINE (Fig. 8)

Note: When in operation the machine pulley must always turn over away from operator.

Mark a design (see Fig. 8) on 30 cm (12 inch) square piece of cloth. Place cloth under presser foot so that the needle will enter cloth at point 1. Turn handle Ⓐ, Fig. 6 to the right and the hook of the needle will be turned in the same direction. Lower presser foot, start machine pulley by turning it over away from you, grasp handle Ⓐ and pull it down to start the machine. With handle depressed and to the right, cloth will be fed to point ❷, then turn handle to the front and cloth will be fed to point ❸ turn handle to the left and cloth will be fed to point ❹ etc.

To stop machine raise handle Ⓐ. Machine will stop with needle as its highest point.

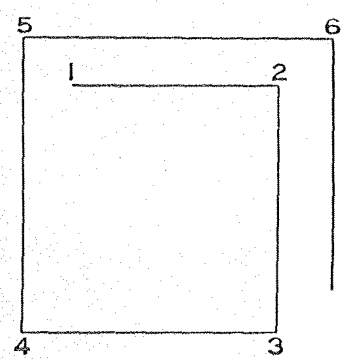

Fig.8

9. TO OPERATE THE MACHINE (Fig. 9)

The operator should practice embroidering designs similar to those illustrated below.

These designs can be sketched on white material such as lawn, and by following them, the operator can soon become proficient enough to attempt more intricate designs or patterns.

Fig.9

10. TO REGULATE THE PRESSER FOOT (F

The pressure on the presser foot is regulated by the thumb screw Ⓒ, Fig. 4. To increase the pressure, turn the thumb screw over to the right or downward. To decrease the pressure, turn the thumb screw over to the left or upward.

11. TENSIONS (Fig. 5)

If stitches are too tight, raise needle bar approximately 1.5 m/m (1/16 inch).

Various effects can be produced by changing the height of the needle bar as well as by adjusting the length of stitch.

The tension on the thread is regulated by the thumb nut ⓑ, Fig. 5 at the left of the tension discs. To increase the tension turn this nut over toward you. To decrease the tension turn this nut over from you. This tension should be only tight enough to prevent the skipping of stitch.

From the library of: Superior Sewing Machine & Supply LLC

From the library of: Superior Sewing Machine & Supply LLC

12. TO ADJUST THE LENGTH OF STITCH (Fig. 10)

The length of stitch is adjusted by screw ⓐ, Fig. 10. To lengthen the stitch, loosen locking lever ⓑ and turn screw ⓐ over to the left or upward, then tighten locking lever ⓑ.

To shorten the stitch, loosen locking lever ⓑ and turn the screw ⓐ over to the right or downward, then tighten locking lever ⓑ.

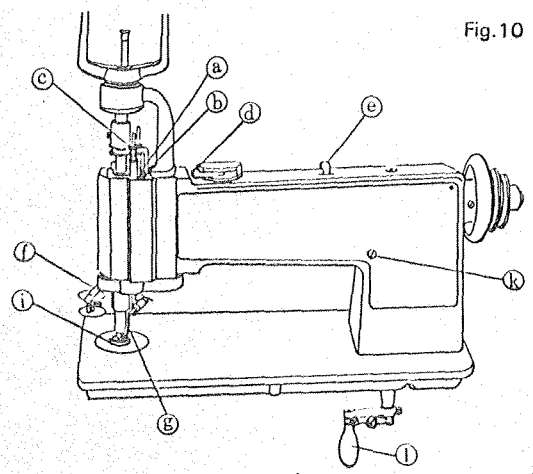

Fig. 10

13. TO REGULATE THE PRESSURE ON THE NIPPLE (Figs. 10 & 11)

The pressure on the nipple is regulated by the thumb screw ⓒ, Fig. 10 at the top of the machine. To increase the pressure, turn this thumb screw over to the right or downward. To decrease the pressure, turn this thumb screw over to the left or upward.

Note: Too much pressure on the nipple may cause the thread to break.

When sewing fine net, it is sometimes necessary to prevent the nipple from touching the needle plate.

To raise the nipple, insert a screwdriver in hole Ⓐ, Fig. 11 and loosen the set screw therein. The eccentric adjusting stud Ⓑ can then be turned by the wrench provided so that nipple can be set at the desired height, then tighten the set screw in hole Ⓐ.

Fig. 11

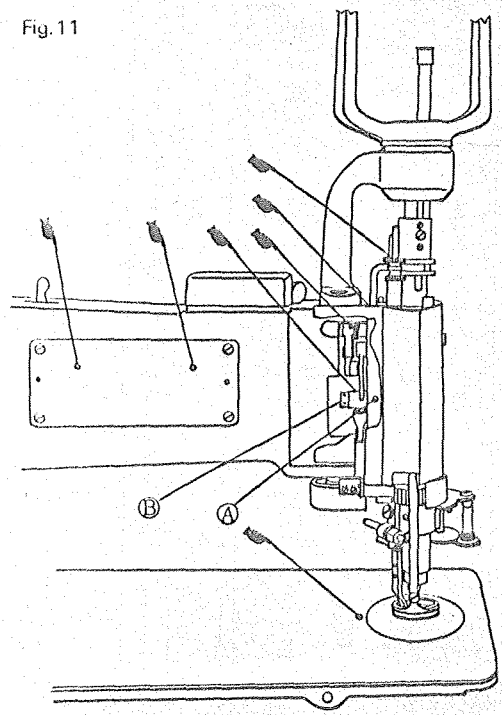

14. THE LOOPER (Fig. 12)

Allow the stop motion to throw the machine out of action and make sure that it is securely held in its looking position. Raise the needle holder to avoid breaking the point of the needle, remove the needle plate after removing the thumb screw ⓓ, Fig. 12, and observe the notch in the looper which, when in its correct position, should be at the rear slightly to the right of the needle, while the handle ⓔ is toward the front.

From the library of: Superior Sewing Machine & Supply LLC

From the library of: Superior Sewing Machine & Supply LLC

15. TO SET THE LOOPER (Figs. 4 & 12)

Turn the machine back on its hinges and turn handle ❷, Fig. 12 and screw Ⓑ, Fig. 4 to the front. Loosen set screw ❸, Fig. 12 of the operating worm gear ❹, and turn the gear slightly, until the notch in the looper is in its correct position as instructed above. After having set the worm gear flush with the end of the looper shaft ❺, tighten the set screw ❸.

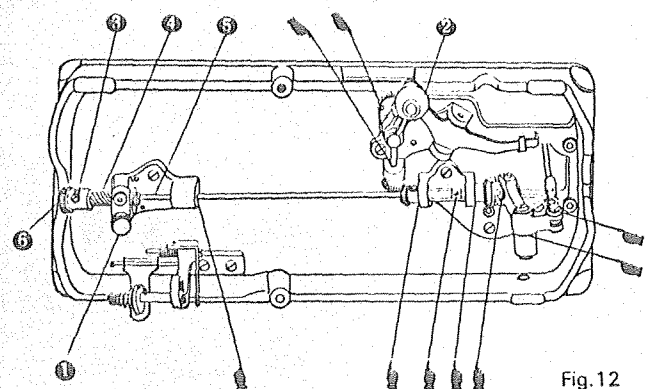

Fig.12

16. TO ADJUST THE NUMBER OF THE BRAIDING (Fig. 10)

The number of the braiding can be adjusted by the lever ⓓ, Fig. 10, which is located on the top of the machine frame. At the number 0, the gears do not engage and the machine will be operated as chainstitch, moss stitch or tape attaching embroidery.

In case of the number 1, one braiding (roll) per one stitch
In case of the number 2, 1/2 braiding (roll) per one stitch
In case of the number 3, 1/3 braiding (roll) per one stitch
In case of the number 4, 1/4 braiding (roll) per one stitch

The bigger the number is set, the coarser the internal of the braiding will be. Therefore, set the number 1 for normal braiding stitch.

Note: Do not change the lever while the clutch is engaging. If do so, it may cause the machine to damage.

17. TO ADJUST THE TENSION OF THE BRAIDING (Fig. 10)

It is the best for the normal braiding embroidery works that the braid spool bracket ⓕ, Fig. 10 is set in the left while the handle ⓘ is at the front.

To adjust as above, bring the handle ⓘ to front, hold the handle by the knee as it does not turn round, then press the gear changing lever ⓔ, Fig. 10 to the right and turn the braid spool bracket ⓕ to the above position.

To increase the tension of the braiding, turn the braid spool bracket ⓕ over from you. To decrease the tension of the braiding, turn the braid spool bracket ⓕ over toward you.

If the gears do not engage after the above adjustment, hold the braid spool bracket ⓕ by the left hand and turn the pulley by the right hand.

Note: Do not press the gear changing lever ⓔ while the clutch is engaging. If do so, it may cause the machine to damage.

The additional adjustment will be made by the braid spool adjusting thumb nut ⓖ, Fig. 7 and the braid leader guide ⓖ, Fig. 10.

18. RAY STITCH (Figs. 4 & 7)

The ray stitch can be done by adjusting the tensions of the thread loose, the tensions of the cord and the braid slightly tight as you like.

(1) For loosening thread (Fig. 4)
loosen the screw Ⓑ, Fig. 4 and lift the needle bar Ⓐ so that the thread loosens.

From the library of: Superior Sewing Machine & Supply LLC

From the library of: Superior Sewing Machine & Supply LLC

(2) For tightening cord (Fig. 7)
tighten the screw ⑯, Fig. 7 so that the rotation of the cord spool ⑫ becomes slow.

(3) For tightening braid (Fig. 7)
tighten the nut ⑯, Fig. 7 so that the rotation of the braid spool ⑨ becomes slow.

Then, set the lever ⓓ , Fig. 10 to the number 1.

19. PILE OR MOSS STITCH (Figs. 4, 10 & 12)

The raised pile or moss stitch is produced by adjusting the machine so that it will drop the stitches in loose loops on the materials. To accomplish this, turn handle Ⓚ, Fig. 4 to the front, loosen the screw Ⓑ and turn the needle bar Ⓐ so that the hook of the needle will point directly to the back of the machine, then tighten the screw Ⓑ. Reach under the bed of the machine with the left hand, grasp the knurled end ⑥, Fig. 12 of the operating worm gear ⑥ draw the worm gear to the left and while holding it turn handle ⑫ around to the right directly to the back, then release the knurled end of the gear.

The looper will then be set in the opposite direction to that which is required for the chain stitch, or with the notch of the looper at the front of the needle while handle Ⓘ, Fig. 10 is at the front. Change the presser foot Ⓘ to the presser foot (spur).

By operating the machine and turn handle Ⓘ rapidly, so as to make very small circles of dropped stitch loops laid one on the other, raised pile work is produced. The higher the needle is set the longer the loop will be. The size of the thread and thickness of the material used will have to be considered when adjusting the machine for pile stitching.

From the library of: Superior Sewing Machine & Supply LLC

From the library of: Superior Sewing Machine & Supply LLC

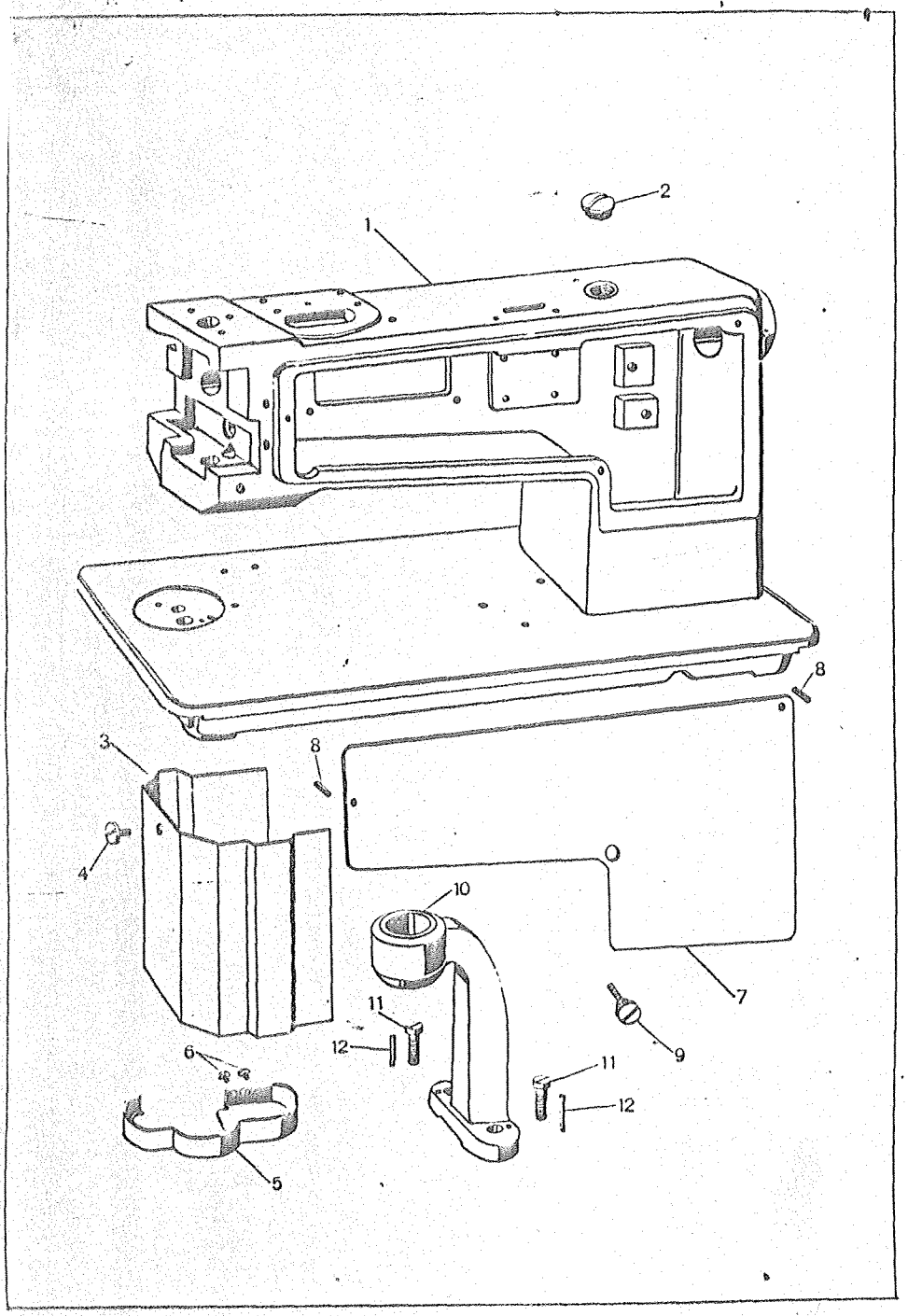

Machine Frame & Covers Components

Ref. No.	Parts No.	Description
1	AM1114-10	Machine Frame
2	8181	Arm Top Screw
3	8470	Arm Head Cover
4	5227	Arm Head Cover Thumb Screw
5	8466–A	Spool Carrier Driving Gear Cover
6	4015	Spool Carrier Driving Gear Cover Set Screw
7	8434	Arm Side Cover
8	8150	Arm Side Cover Position Pin
9	8483	Arm Side Cover Thumb Screw
10	S–8445	Cord Spool Bracket Supporting Arm with Needle Bearing
11	8172	Cord Spool Bracket Supporting Arm Clamp Screw
12	8146	Cord Spool Bracket Supporting Arm Position Pin

TK-111-10

From the library of: Superior Sewing Machine & Supply LLC

From the library of: Superior Sewing Machine & Supply LLC

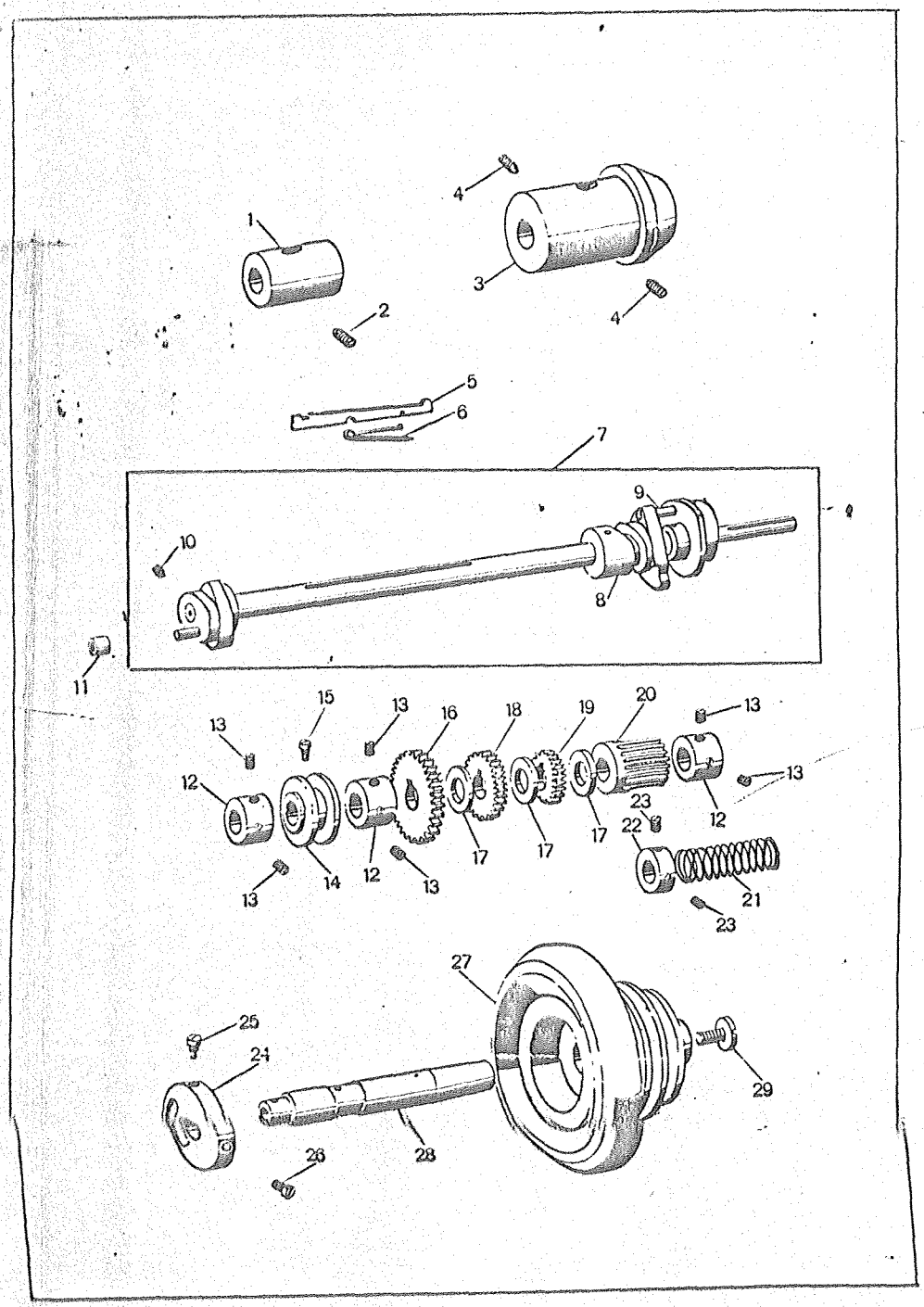

Arm Shaft Mechanism Components

Ref. No.	Parts No.	Description
1	8403	Arm Shaft Bushing
2	98–A	Arm Shaft Bushing Set Screw
3	8404	Driving Pulley Sleeve Bushing
4	131	Driving Pulley Sleeve Bushing Set Screw
5	8406	Arm Shaft Gear Sliding Key
6	8407	Arm Shaft Gear Sliding Key Spring
7	824	Arm Shaft Assembly with Ref. Nos. 8–10
8	8008	Stop Cam
9	8163–B	Stop Cam Driving Stud
10	8005–A	Needle Driving Cam Position Screw
11	8006	Needle Driving Cam Roller
12	5266	Arm Shaft Collar
13	132–C	Arm Shaft Collar Set Screw
14	8405	Arm Shaft Grooved Collar
15	8480–A	Arm Shaft Grooved Collar Set Screw
16	8408	Arm Shaft Gear (No. 1)
17	8412	Arm Shaft Gear Washer
18	8409	Arm Shaft Gear (No. 2)
19	8410	Arm Shaft Gear (No. 3)
20	8411	Arm Shaft Gear (No. 4)
21	8009–A	Stop Cam Spring
22	8010	Stop Cam Spring Collar
23	13[illegible]	Stop Cam Spring Collar Set Screw
24	8012	[illegible] Shaft Driving Flange
25	8013	Arm [illegible]ft Driving Flange Position Screw
26	8014	Arm [illegible]t Driving Flange Set Screw
27	8017–B	Driving [illegible]y
28	8015	Driving [illegible] Sleeve
29	8018	Driving Pu[illegible]y Sleeve Screw

From the library of: Superior Sewing Machine & Supply LLC

From the library of: Superior Sewing Machine & Supply LLC

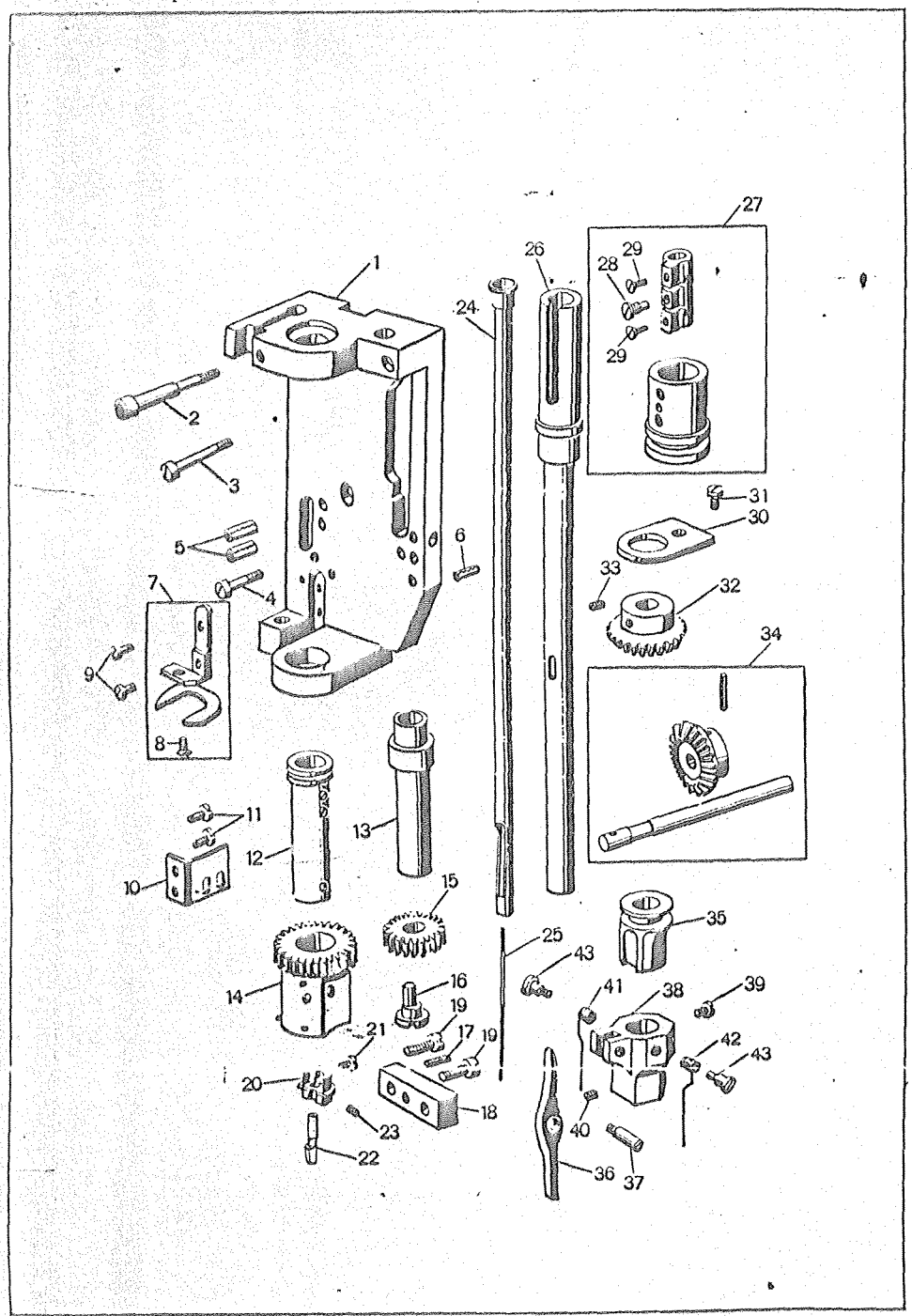

Arm Head Parts Components (No. 1)

Ref. No.	Parts No.	Description
1	8472	Arm Head
2	8020	Arm Head Screw (upper) (long)
3	8021	Arm Head Screw (upper) (short)
4	8022	Arm Head Screw (lower)
5	8150	Arm Head Position Pin
6	8145	Arm Head Position Pin
7	S–8462	Spool Carrier Driving Gear Guide with Ref. No. 8
8	11152	Spool Carrier Driving Gear Guide Screw
9	4031	Spool Carrier Driving Gear Guide Set Screw
10	8474	Spool Carrier Driving Gear Cover Bracket
11	4015	Spool Carrier Driving Gear Cover Bracket Set Screw
12	8452–A	Nipple Carrier Sleeve with Screws
13	8465	Nipple Carrier Sleeve Bushing
14	8464	Spool Carrier Driving Gear
15	8461	Spool Carrier Driving Idler Gear
16	8475–C	Spool Carrier Driving Idler Gear Stud
17	2553–A	Spool Carrier Driving Idler Gear Stud Set Screw
18	8463	Spool Carrier Idler Gear Supporting Block
19	113–A	Spool Carrier Idler Gear Supporting Block Set Screw
20	8320–A	Nipple Holder
21	8339	Nipple Holder Set Screw
22	8498–A–3	Nipple (for Braiding)
23	8335	Nipple Set Screw
24	8510–AA	Needle Bar
25	8027–3	Needle (137x1 #3)
26	8449	Arm Head Sleeve
27	831	Needle Bar Guide Block & Collar with Ref. Nos. 28–29
28	8477	Needle Bar Guide Block Set Screw (Large)
29	8476	Needle Bar Guide Block Set Screw (Small)
30	8308	Arm Head Sleeve Cap
31	5176–A	Arm Head Sleeve Cap Screw
32	8030	Arm Head Sleeve Gear
33	129–B	Arm Head Sleeve Gear Set Screw
34	S–8456	Feed Rotating Shaft & Gear
35	8311	Feed Slide Block
36	8312	Feed Lever
37	8314	Feed Lever Hinge Pin
38	8313	Feed Lever Bracket
39	124	Feed Lever Bracket Set Screw
40	8335	Feed Lever Bracket Set Screw
41	8037	Feed Recovering Spring (Right)
42	8036	Feed Recovering Spring (Left)
43	8038	Feed Recovering Spring Screw

From the library of: Superior Sewing Machine & Supply LLC

From the library of: Superior Sewing Machine & Supply LLC

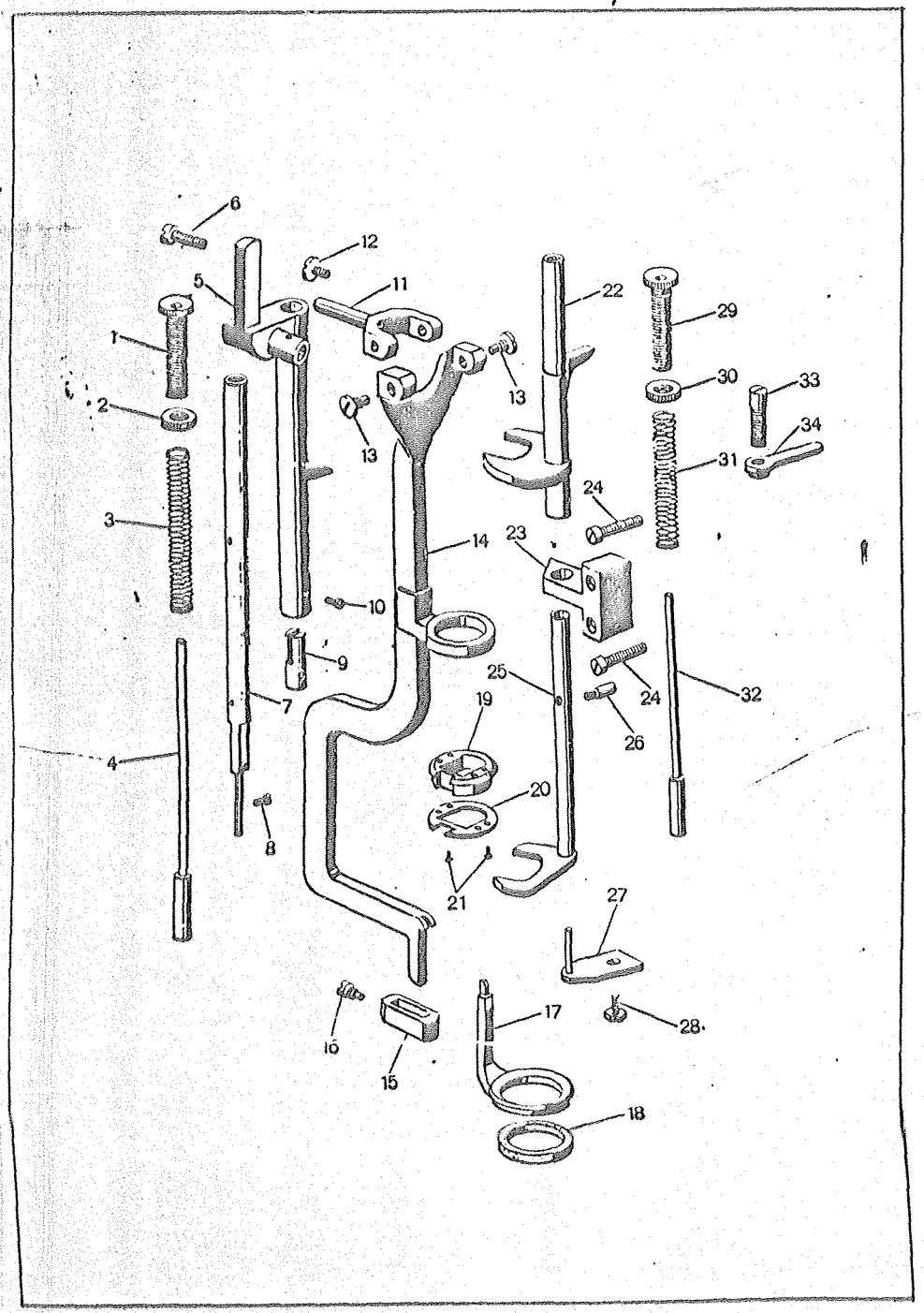

Arm Head Parts Components (No. 2)

Ref. No.	Parts No.	Description
1	8067	Presser Foot Slide Bar Thumb Screw
2	8161	Presser Foot Slide Bar Thumb Screw Nut
3	8065	Presser Foot Slide Bar Spring
4	8066	Presser Foot Slide Bar Spring Plunger
5	8322–A	Presser Foot Slide Bar
6	8139	Presser Foot Slide Bar Adjusting Screw
7	8063	Presser Foot Slide Bar Guide
8	8138	Presser Foot Slide Bar Guide Set Screw
9	8064	Presser Foot Slide Bar Spring Stop
10	8140	Presser Foot Slide Bar Spring Stop Screw
11	8069–A	Presser Foot Lever Swivel
12	8188	Presser Foot Lever Swivel Stop Screw
13	8070–A	Presser Foot Lever Swivel Hinge Screw
14	S–8453	Presser Foot Lever
15	8072	Presser Foot Clamp
16	8481–A	Presser Foot Clamp Thumb Screw
17	8454–A	Presser Foot
18	8073–B	Presser Foot Shoe (Rubber)
19	8315	Feed Lever Bracket Guide
20	8316	Feed Lever Bracket Guide Cap
21	8136	Feed Lever Bracket Guide Cap Screw
22	8310–A	Feed Slide Bar
23	8428	Feed Slide Bar Block
24	4173	Feed Slide Bar Block Set Screw
25	8317	Nipple Carrier
26	8051	Nipple Carrier Lifting Screw Stud
27	8055	Nipple Carrier Guide
28	8182	Nipple Carrier Guide Screw
29	8054	Nipple Carrier Thumb Screw
30	8160	Nipple Carrier Thumb Screw Nut
31	8052	Nipple Carrier Spring
32	8053	Nipple Carrier Extension
33	8047	Feed Regulating Screw
34	8048	Feed Regulating Screw Lock Lever Nut

From the library of: Superior Sewing Machine & Supply LLC

From the library of: Superior Sewing Machine & Supply LLC

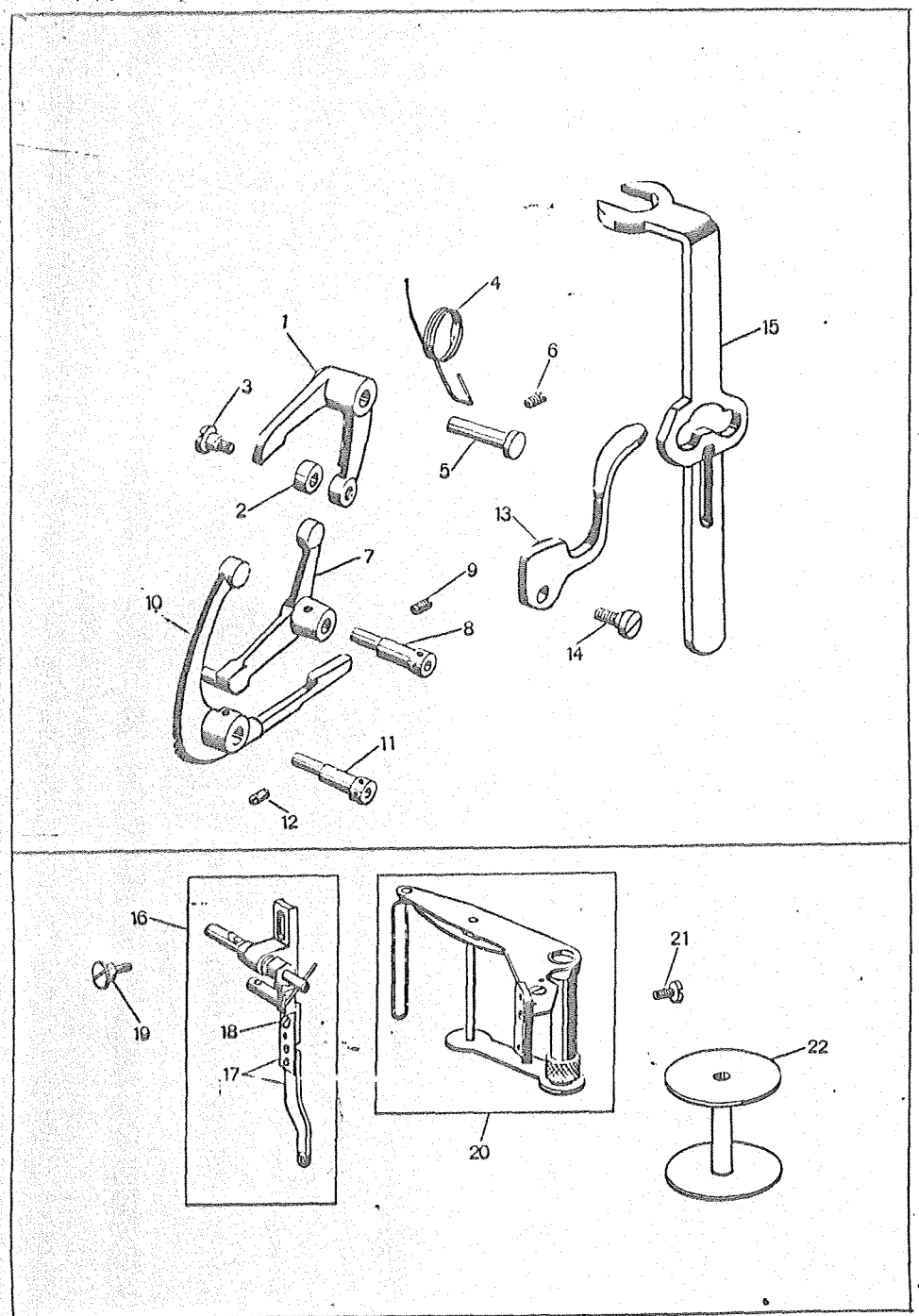

Arm Head Parts (No. 3), Braid Leader & Spool Carrier Components

Ref. No.	Parts No.	Description
1	8042	Feed Bell Crank
2	8044	Feed Bell Crank Roller
3	8045	Feed Bell Crank Roller Screw
4	8046	Feed Bell Crank Spring
5	8043	Feed Bell Crank Hinge Stud
6	5225–C	Feed Bell Crank Hinge Stud Set Screw
7	8057	Nipple Carrier Bell Crank
8	8455	Nipple Carrier Bell Crank Hinge Stud
9	5225–C	Nipple Carrier Bell Crank Hinge Stud Set Screw
10	8059	Presser Foot Slide Bell Crank
11	8455	Presser Foot Slide Bell Crank Hinge Stud
12	5225–C	Presser Foot Slide Bell Crank Hinge Stud Set Screw
13	8060–A	Presser Foot Lifter
14	8061	Presser Foot Lifter Hinge Screw
15	8304	Needle Bar Operating Slide
16	827	Braid Leader Assembly with Ref. Nos. 17–18
17	827–1	Braid Leader Guide
18	4185	Braid Leader Guide Set Screw
19	8484	Braid Leader Thumb Screw
20	826	Spool Carrier Assembly
21	124	Spool Carrier Set Screw
22	8467	Braid Spool (Metal)

From the library of: Superior Sewing Machine & Supply LLC

From the library of: Superior Sewing Machine & Supply LLC

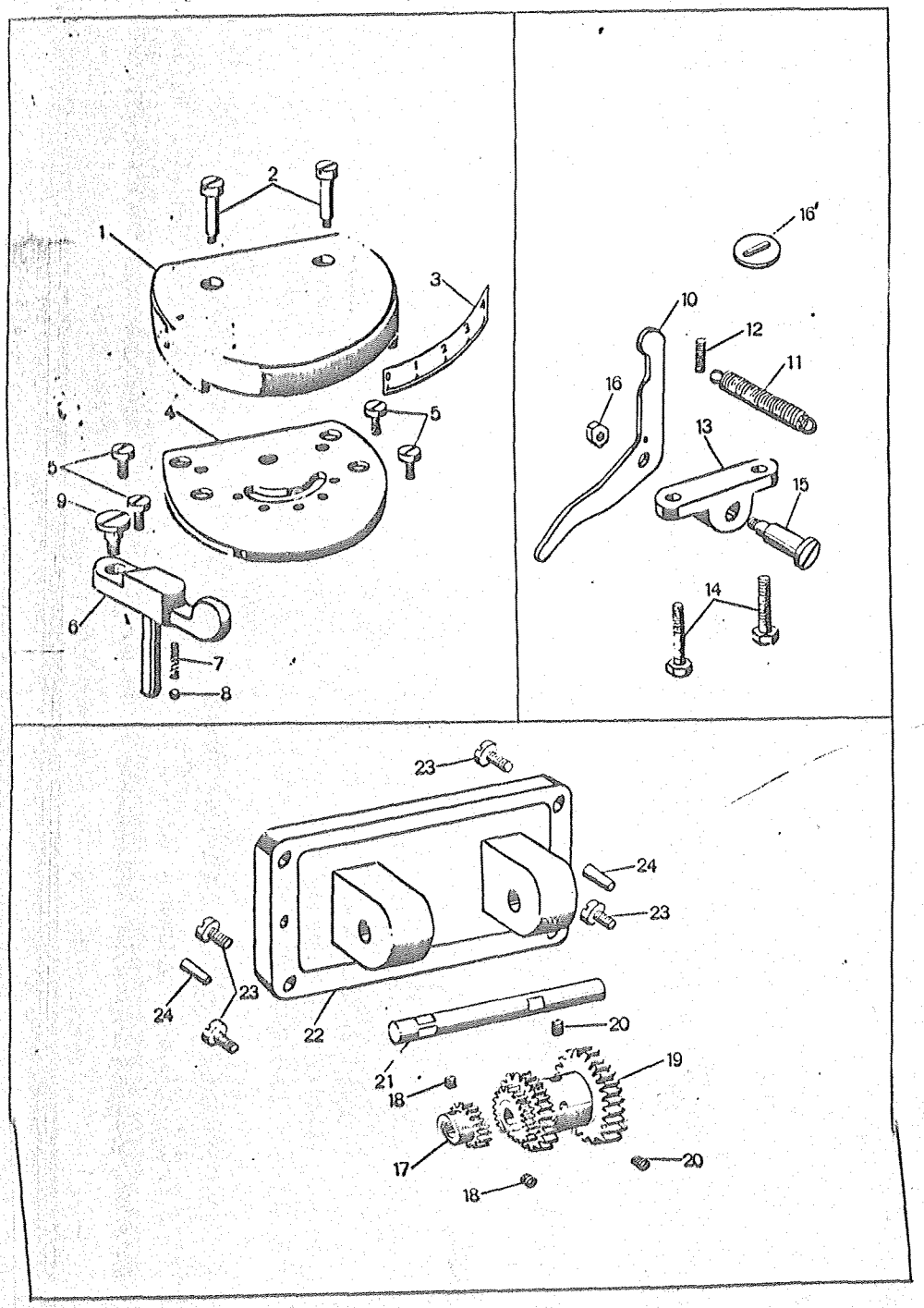

Gear Change Lever, Spool Carrier Disengaging Lever & Intermediate Gear Parts Components

Ref. No.	Parts No.	Description
1	8439	Gear Change Lever Cover
2	8440	Gear Change Lever Cover Set Screw
3	8441	Gear Change Graduated Plate
4	8435	Gear Change Lever Base
5	113–B	Gear Change Lever Base Set Screw
6	8437–1	Gear Change Lever
7	8437–2	Gear Change Lever Spring
8	8437–3	Gear Change Lever Ball
9	8438	Gear Change Lever Set Screw
10	[illegible]90	Spool Carrier Disengaging Lever
11	[illegible]–B	Spool Carrier Disengaging Lever Spring
12	41[illegible]	Spool Carrier Disengaging Lever Spring Screw
13	8465	Spool Carrier Disengaging Lever Bracket
14	8491	Spool Carrier Disengaging Lever Bracket Set Screw
15	8489	Spool Carrier Disengaging Lever Stud
16	5207	Spool Carrier Disengaging Lever Stud Nut
16'	8514	Spool Carrier Disengaging Lever Cover
17	8416	Intermediate Gear (No. 1)
18	129–B	Intermediate Gear Set Screw
19	S–8417	Intermediate Gear Assembly (No. 2–4)
20	129–A	Intermediate Gear Set Screw
21	8415	Intermediate Gear Shaft
22	8414	Intermediate Gear Bracket
23	114–B	Intermediate Gear Bracket Set Screw
24	8146	Intermediate Gear Bracket Dowel Pin

From the library of: Superior Sewing Machine & Supply LLC

From the library of: Superior Sewing Machine & Supply LLC

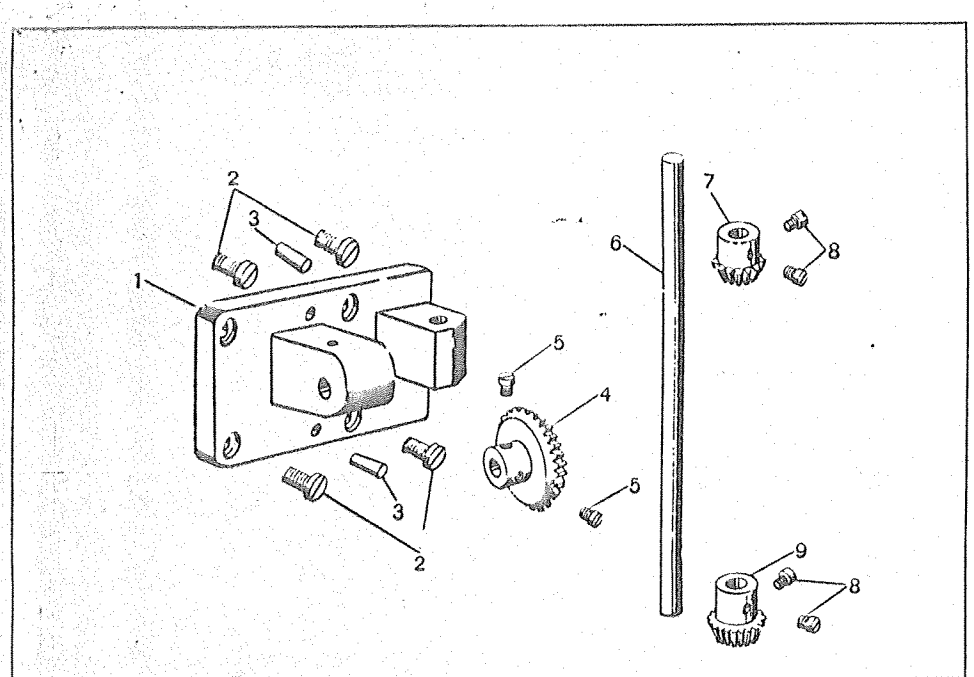

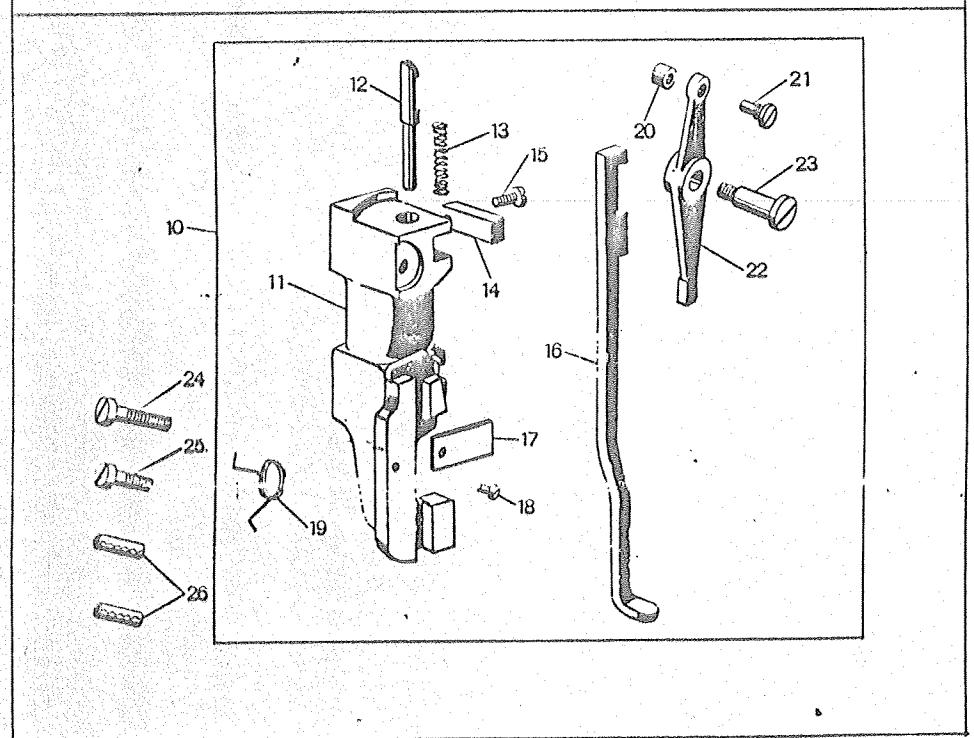

Feed Rotating Gear & Stop Bracket Parts Components

Ref. No.	Parts No.	Description
1	8424	Feed Rotating Shaft Bracket
2	113–A	Feed Rotating Shaft Bracket Set Screw
3	8146	Feed Rotating Shaft Bracket Position Pin
4	8423–A	Feed Rotating Gear (Rear)
5	8142	Feed Rotating Gear Set Screw
6	8420	Stitch Rotating Shaft
7	8422–A	Stitch Rotating Gear (Upper)
8	8142	Stitch Rotating Gear Set Screw
9	8112–B	Stitch Rotating Gear (Lower)
10	821	Stop Bracket Assembly (Ref. Nos. 11–23)
11	8442	Stop Bracket
12	8079	Stop Bracket Interlocking Rod
13	8486	Stop Bracket Interlocking Rod Spring
14	8081	Stop Bracket Interlocking Stop Block
15	121	Stop Bracket Interlocking Stop Block Screw
16	8443	Starting Trip Lever Slide
17	8083	Starting Trip Lever Slide Cap
18	124	Starting Trip Lever Slide Cap Screw
19	8084	Starting Trip Lever Slide Spring
20	8077	Stop Cam Roller
21	8078	Stop Cam Roller Screw Stud
22	8075	Stop Cam Rocking Lever
23	8076	Stop Cam Rocking Lever Hinge Screw
24	8473	Stop Bracket Set Screw (Long)
25	8172	Stop Bracket Set Screw (Short)
26	8159	Stop Bracket Position Pin

From the library of: Superior Sewing Machine & Supply LLC

From the library of: Superior Sewing Machine & Supply LLC

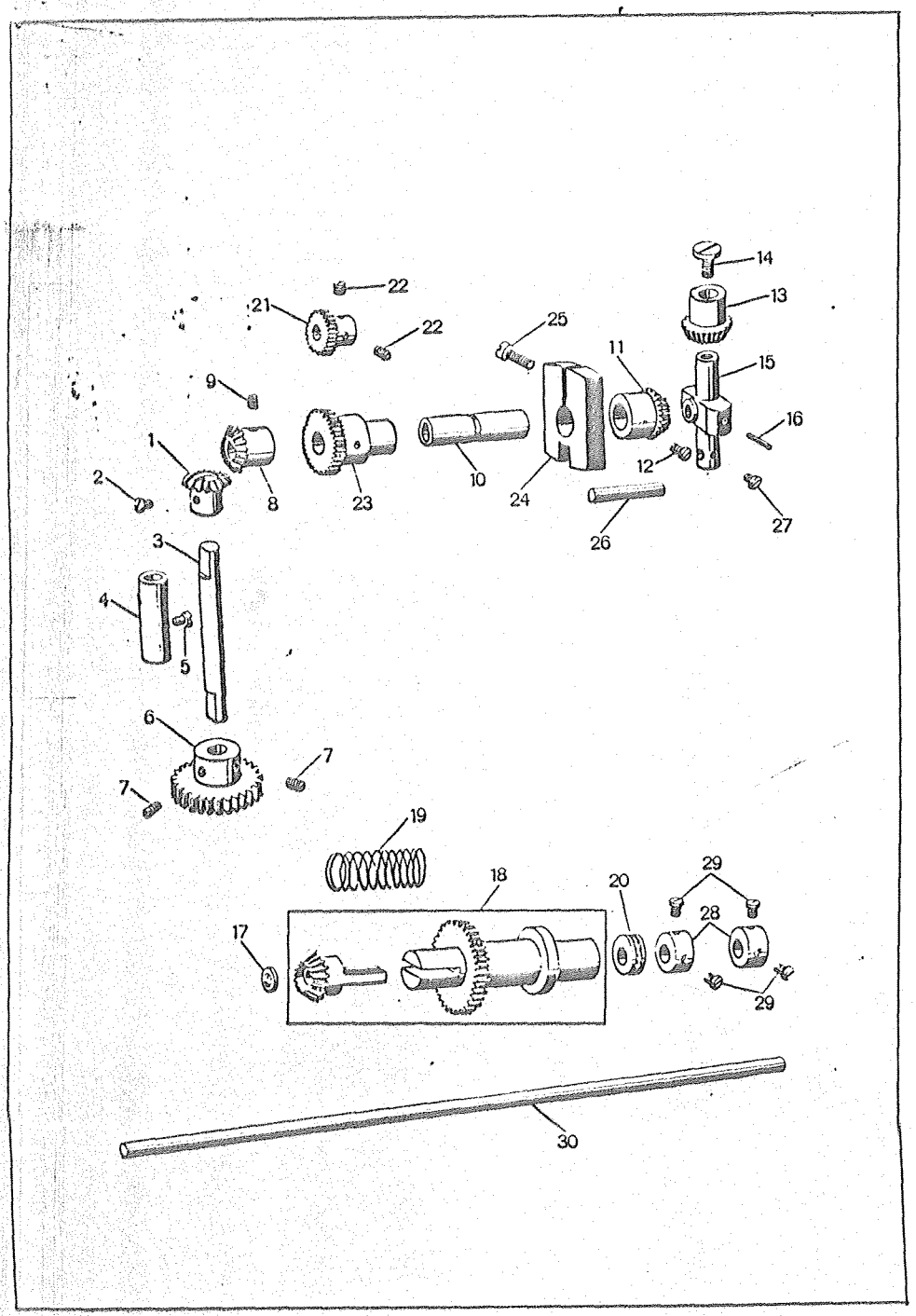

Feed Rotating Shaft Mechanism Components

Ref. No.	Parts No.	Description
1	8110–A	Spool Carrier Gear Driving Bevel Gear
2	8142	Spool Carrier Gear Driving Bevel Gear Set Screw
3	8458	Spool Carrier Gear Driving Gear Shaft
4	8459	Spool Carrier Gear Driving Gear Shaft Bushing
5	4078	Spool Carrier Gear Driving Gear Shaft Bushing Set Screw
6	8460	Spool Carrier Gear Driving Gear
7	129–A	Spool Carrier Gear Driving Gear Set Screw
8	8097–A	Spool Carrier Gear Driving Bevel Gear
9	129–B	Spool Carrier Gear Driving Bevel Gear Set Screw
10	8457	Spool Carrier Gear Driving Bevel Gear Sleeve
11	8097	Spool Carrier Gear Driving Bevel Gear
12	8142	Spool Carrier Gear Driving Bevel Gear Set Screw
13	8427	Spool Carrier Gear Driving Bevel Gear
14	8496	Spool Carrier Gear Driving Bevel Gear Set Screw
15	8429	Spool Carrier Gear Driving Bevel Gear Bracket
16	8146	Spool Carrier Gear Driving Bevel Gear Bracket Taper Pin
17	8495	Spool Carrier Gear Driving Bevel Gear Bracket Washer
18	S–8425	Spool Carrier Gear Driving Sleeve Gear Assembly
19	8492–T	Spool Carrier Gear Driving Sleeve Gear Spring
20	8504	Spool Carrier Gear Driving Sleeve Gear Thrust Bearing
21	8433	Feed Rotating Shaft Gear (Small)
22	129–B	Feed Rotating Shaft Gear Set Screw
23	8432	Feed Rotating Shaft Gear (Large)
24	8431	Feed Rotating Shaft Block
25	8479	Feed Rotating Shaft Block Set Screw
26	8430	Feed Rotating Shaft Block Pin
27	5262	Feed Rotating Shaft Block Pin Set Screw
28	10017–A	Feed Rotating Shaft Collar
29	8142	Feed Rotating Shaft Collar Set Screw
30	8421	Feed Rotating Shaft

From the library of: Superior Sewing Machine & Supply LLC

From the library of: Superior Sewing Machine & Supply LLC

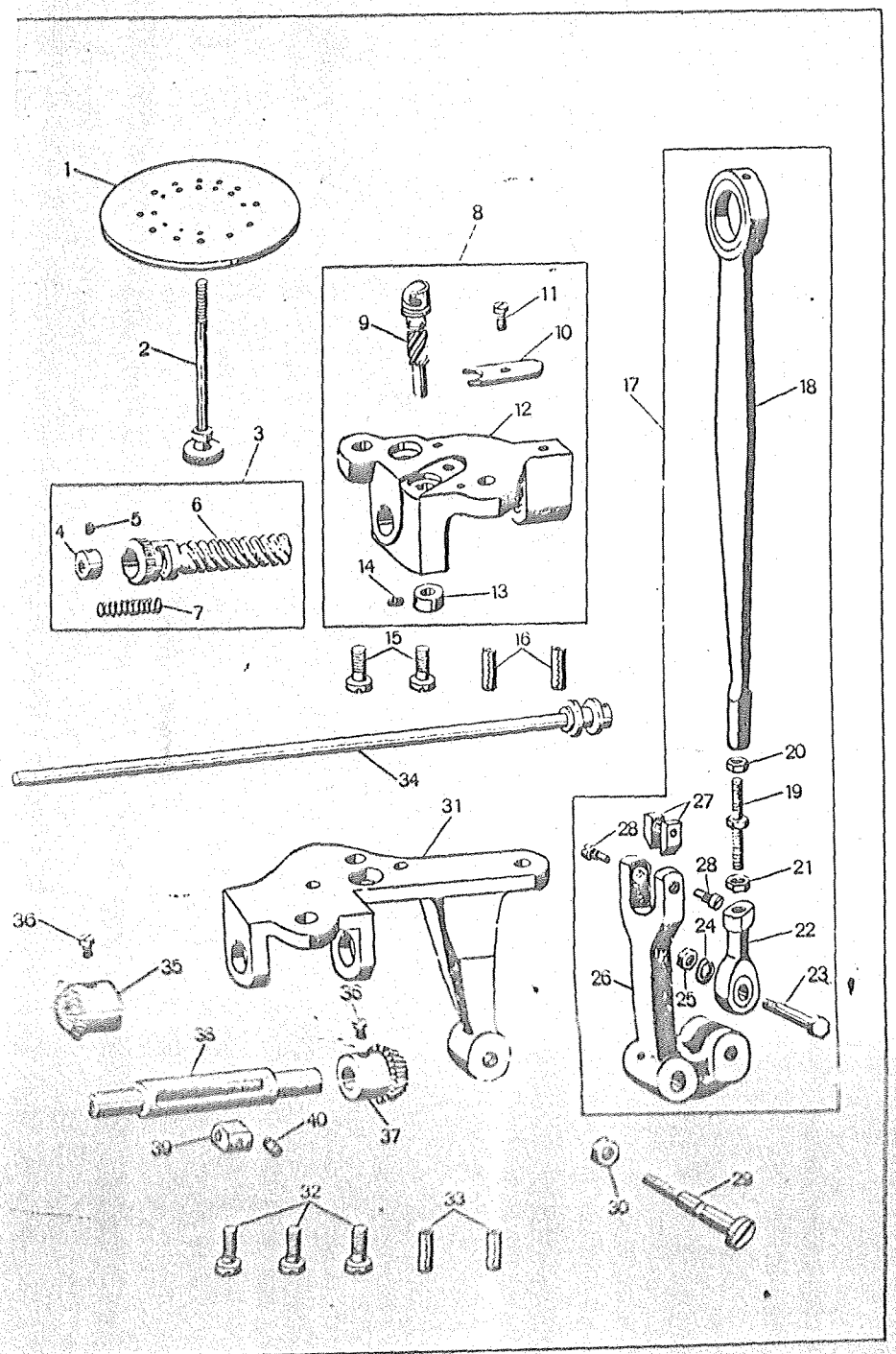

Looper Operating Mechanism Components

Ref. No.	Parts No.	Description
1	8106	Needle Plate
2	8107	Needle Plate Clamping Thumb Screw
3	805	Looper Operating Gear Assembly (Ref. Nos. 4 – 7)
4	8104	Looper Operating Collar
5	8105	Looper Operating Collar Set Screw
6	8102	Looper Operating Gear (Spiral)
7	8103	Looper Operating Gear Spring
8	806	Looper Bracket Assembly (Ref. Nos. 9 – 14)
9	8100–A	Looper
10	8101	Looper Position Plate
11	124	Looper Position Plate Screw
12	8099	Looper Bracket
13	8152	Looper Collar
14	129–B	Looper Collar Set Screw
15	8158	Looper Bracket Set Screw
16	8150	Looper Bracket Position Pin
17	822	Looper Operating Connection Assembly (Ref. Nos. 18 – 28)
18	S–8444	Looper Operating Connection
19	8174	Looper Operating Connection Joint Pitman
20	8175	Looper Operating Connection Joint Pitman Nut (Upper)
21	8176	Looper Operating Connection Joint Pitman Nut (Lower)
22	8177	Looper Operating Connection Joint
23	8178	Looper Operating Connection Joint Hinge Stud
24	8179	Looper Operating Connection Joint Hinge Stud Spring Washer
25	5207	Looper Operating Connection Joint Hinge Stud Nut
26	8089–A	Looper Operating Bell Crank
27	8092	Looper Operating Bell Crank Hinge Block
28	8093	Looper Operating Bell Crank Hinge Block Screw
29	8090	Looper Operating Bell Crank Hinge Screw
30	8091	Looper Operating Bell Crank Hinge Screw Nut
31	8088	Looper Operating Bell Crank Bracket
32	8143	Looper Operating Bell Crank Bracket Set Screw
33	8149	Looper Operating Bell Crank Bracket Position Pin
34	8094	Looper Operating Shaft
35	8097–A	Looper Operating Shaft Bevel Gear (Left)
36	8142	Looper Operating Shaft Bevel Gear Set Screw
37	8096–A	Looper Operating Shaft Bevel Gear (Right)
38	8095–B	Looper Operating Shaft Sleeve
39	8098–B	Looper Operating Shaft Guide Block
40	129–B	Looper Operating Shaft Guide Block Set Screw

From the library of: Superior Sewing Machine & Supply LLC

From the library of: Superior Sewing Machine & Supply LLC

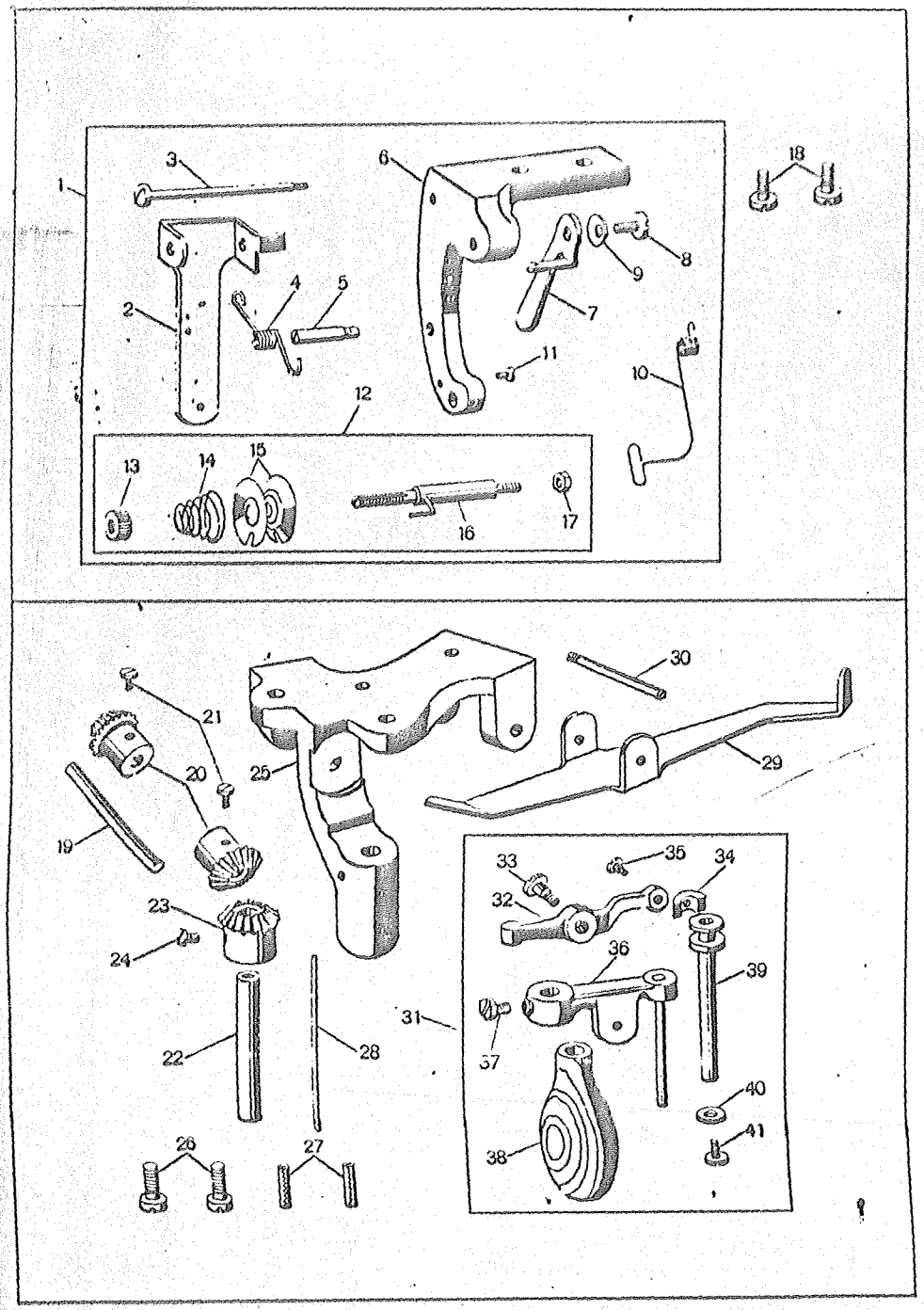

Tension Regulating Parts & Stitch Rotating Hand Lever Parts Components

Ref. No.	Parts No.	Description
1	811	Tension Bracket Assembly (Ref. Nos. 2 – 17)
2	8127	Tension Regulating Plate
3	8128	Tension Regulating Plate Hinge Screw
4	8129–A	Tension Regulating Spring
5	8130–A	Tension Regulating Spring Screw Stud
6	8125	Tension Bracket
7	8131	Tension Regulating Lever
8	8132–A	Tension Regulating Lever Hinge Screw
9	4140–A	Tension Regulating Lever Hinge Screw Spring Washer
10	8133–A	Thread Controller Spring
11	121	Thread Controller Spring Screw
12	810	Tension Assembly (Ref. Nos. 13 – 17)
13	81	Tension Thumb Nut
14	5267–A	Tension Spring
15	5190–A	Tension Disc
16	8164	Tension Stud
17	5207	Tension Stud Nut
18	8143	Tension Bracket Set Screw
19	8117	Stitch Rotating Gear Bracket Shaft (Intermediate)
20	8110–A	Stitch Rotating Gear Bracket Shaft Gear
21	8142	Stitch Rotating Gear Bracket Shaft Gear Set Screw
22	8114–A	Stitch Rotating Hand Lever Shaft
23	8096–A	Stitch Rorating Hand Lever Shaft Gear
24	8142	Stitch Rotating Hand Lever Shaft Gear Set Screw
25	8113	Stitch Rotating Gear Bracket
26	8143	Stitch Rotating Gear Bracket Set Screw
27	8149	Stitch Rotating Gear Bracket Position Pin
28	8122	Starting Trip Lever Rod
29	8123	Starting Trip Lever (Intermediate)
30	8124	Starting Trip Lever Hinge Screw
31	808	Stitch Rotating Hand Lever Handle Assembly (Ref. Nos. 31 – 4
32	8119	Starting Trip Lever
33	8045	Starting Trip Lever Hinge Screw
34	8120	Starting Trip Lever Block
35	8121	Starting Trip Lever Block Screw Stud
36	S–8115–A	Stitch Rotating Hand Lever with Pin & Screw
37	5176–A	Stitch Rotating Hand Lever Set Screw
38	8118	Stitch Rotating Hand Lever Handle
39	8116	Stitch Rotating Hand Lever Handle Sleeve
40	5070	Stitch Rotating Hand Lever Handle Sleeve Washer
41	8141	Stitch Rotating Hand Lever Handle Sleeve Screw

From the library of: Superior Sewing Machine & Supply LLC

From the library of: Superior Sewing Machine & Supply LLC

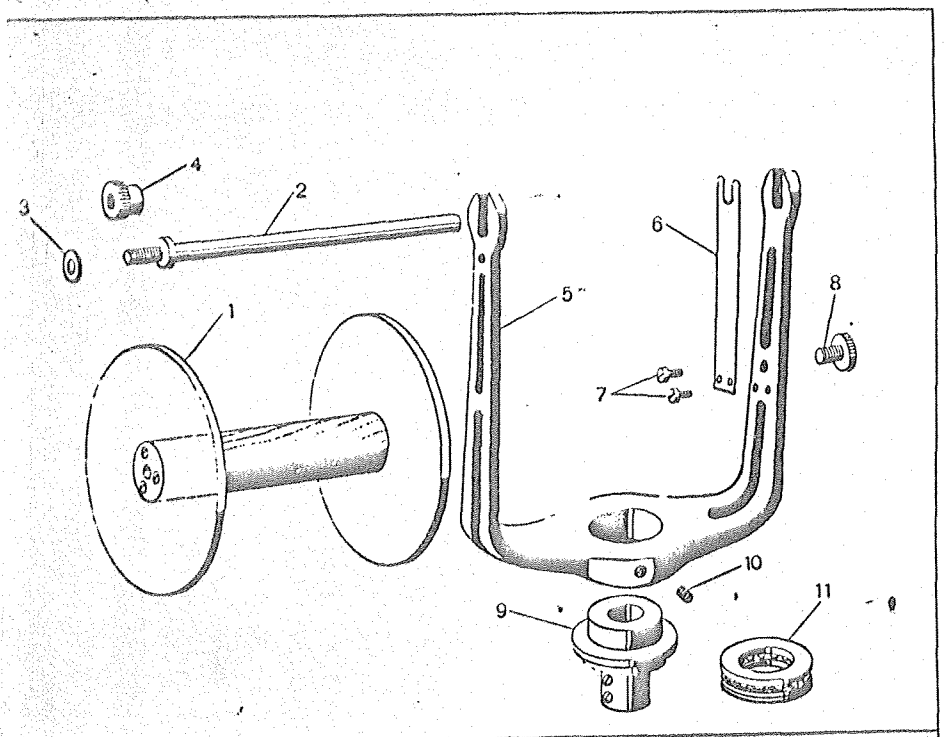

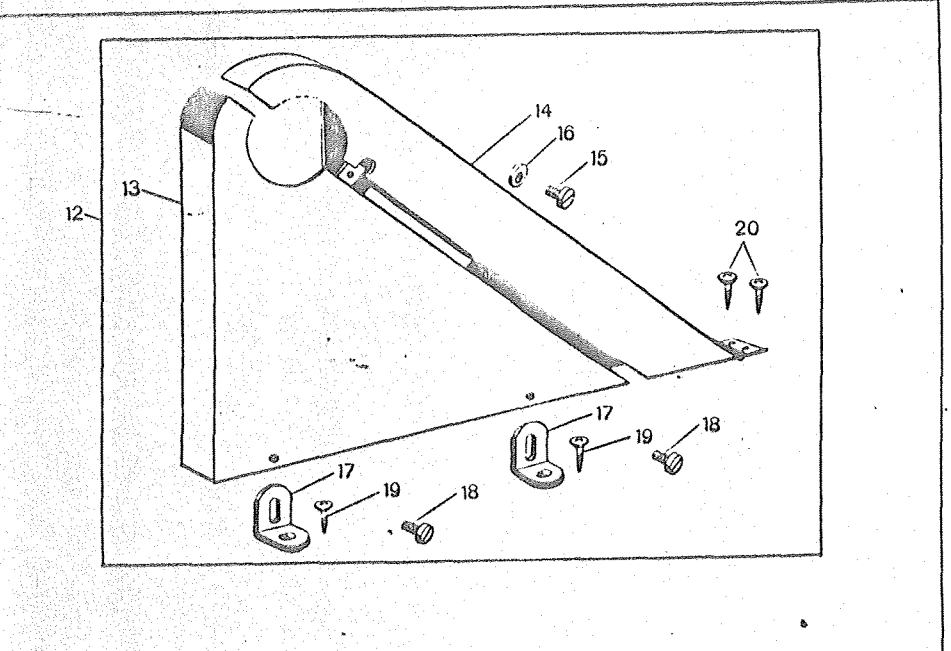

Cord Spool & Belt Cover Components

Ref. No.	Parts No.	Description
1	8336	Cord Spool
2	8331	Cord Spool Spindle
3	7012-A	Cord Spool Spindle Washer
4	8332	Cord Spool Spindle Thumb Nut
5	8487	Cord Spool Bracket
6	8329	Cord Spool Friction Spring
7	8140	Cord Spool Friction Spring Screw
8	4356	Cord Spool Friction Spring Adjusting Screw
9	8448	Cord Spool Bracket Sleeve with Screws
10	98	Cord Spool Bracket Sleeve Set Screw
11	8446	Cord Spool Bracket Sleeve Thrust Bearing
*12	830	Belt Cover Assembly (Ref. Nos. 12 – 19)
*13	8503-1	Belt Cover (Left)
*14	8503-2	Belt Cover (Right)
*15	5276	Belt Cover Set Screw
*16	8185	Belt Cover Washer
*17	11554	Belt Cover Bracket
*18	5233	Belt Cover Bracket Set Screw
*19	11557	Belt Cover Bracket Wood Screw
*20	8184	Belt Cover Wood Screw

* EXTRA ACCESSORIES

From the library of: Superior Sewing Machine & Supply LLC

From the library of: Superior Sewing Machine & Supply LLC

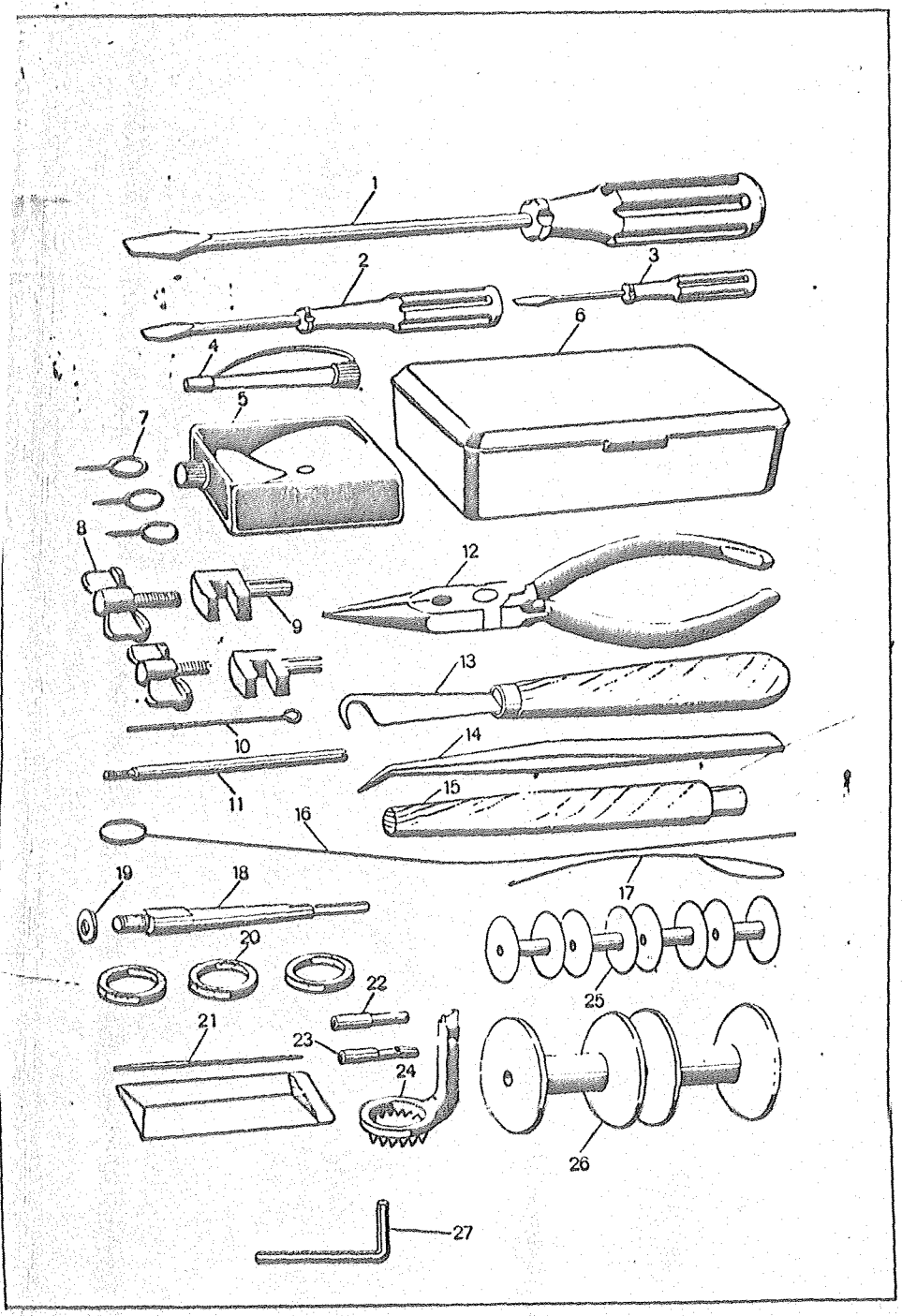

Standard Accessories

Ref. No.	Parts No.	Description
1	AC–01	Screw Driver (Large)
2	AC–02	Screw Driver (Medium)
3	AC–03	Screw Driver (Small)
4	AC–04A	Oiler
5	AC–05	Oil
6	AC–08	Accessory Box
7	8166	Screw Eye
8	8157	Bed Clamping Thumb Screw
9	8165	Machine Hinge Connection
10	8493	Tool (for Adjusting Hinge Stud #8455)
11	8126	Spool Screw Stud
12	8171	Pliers
13	8168	Thread Knife
14	8170	Tweezers
15	8169	Machine Rest Pin (Wood)
16	8499	Cleaning Wire
17	8156	Threader Wire
18	8497	Spool Winder Spindle 捲線器
19	5249	Spool Winder Spindle Washer
20	8073–B	Presser Foot Shoe (Rubber)
21	8027–3	Needle (137x1 #3)
22	8501–4	Nipple (for Chainstitching)
23	8321–4	Nipple (for Tape-Attaching)
24	8505	Presser Foot (Spur)
25	8467	Braid Spool (Metal)
26	8502	Spool (Wood)
27	AC–06	Wrench (3 mm)

From the library of: Superior Sewing Machine & Supply LLC

From the library of: Superior Sewing Machine & Supply LLC

Numerical Parts-List

Parts No.	Page	Parts No.	Page	Parts No.	Page
AC-01	23	4140-A	19	8036	5
AC-02	23	4173	7	8037	5
AC-03	23	4185	9	8038	5
AC-04A	23	4356	21	8042	9
AC-05	23	5070	19	8043	9
AC-08	23	5162-B	11	8044	9
81	19	5176-A	5	8045	9,19
98	21	5176-A	19	8046	9
113-A	5,13	5190-A	19	8047	7
113-B	11	5207	11,19	8048	7
114-B	11	5225-C	9	8051	7
121	13,19	5227	1	8052	7
124	5,9,13,17	5233	21	8053	7
129-A	11,15	5249	23	8054	7
129-B	5,11,15,17	5262	15	8057	9
131	3	5266	3	8059	9
132	3	5267-A	19	8060-A	9
805	17	5276	21	8061	9
806	17	8005-A	3	8063	7
808	19	8006	3	8064	7
810	19	8008	3	8065	7
811	19	8009-A	3	8066	7
821	13	8010	3	8067	7
822	17	8012	3	8069-A	7
824	3	8013	3	8070	7
826	9	8014	3	8072	7
827,827-1	9	8015	3	8073-B	7,23
830	21	8017-B	3	8075	13
831	5	8018	3	8076	13
AM-1114-10	1	8020	5	8077	13
2553-A	5	8021	5	8078	13
4015	1,5	8022	5	8079	13
4031	5	8027	5,23	8081	13
4105	11	8030	5	8083	13

Parts No.	Page	Parts No.	Page	Parts No.	Page
8084	13	8123	19	8169	23
8088	17	8124	19	8170	23
8089-A	17	8125	19	8171	23
8090	17	8126	23	8172	1,13
8091	17	8127	19	8174	17
8092	17	8128	19	8175	17
8093	17	8129-A	19	8176	17
8094	17	8130-A	19	8177	17
8095-B	17	8131	19	8178	17
8096-A	17,19	8132-A	19	8179	17
8097	15	8133-A	19	8181	1
8097-A	15,17	8136	7	8182	7
8098-B	17	8138	7	8184	21
8099	17	8139	7	8185	21
8100-A	17	8140	7,21	8304	9
8101	17	8141	19	8308	5
8102	17	8142	13,15,17,19	8310-A	7
8103	17	8143	17,19	8311	5
8104	17	8145	5	8312	5
8105	17	8146	1,11,13,15	8313	5
8106	17	8149	17,19	8314	5
8107	17	8150	1,5,17	8315	7
8110-A	15,19	8152	17	8316	7
8112-B	13	8156	23	8317	7
8113	19	8157	23		
8114-A	19	8158	17	8320-A	5
S-8115-A	19	8159	13	8321-4	23
8116	19	8160	7	8322-A	7
8117	19	8161	7	8329	21
8118	19	8163-B	3	8331	21
8119	19	8164	19	8332	21
8120	19	8165	23	8335	5
8121	19	8166	23	8336	21
8122	19	8168	23	8339	5

From the library of: Superior Sewing Machine & Supply LLC

From the library of: Superior Sewing Machine & Supply LLC

Parts No.	Page	Parts No.	Page	Parts No.	Page
8403	3	8440	11	8481-A	7
8404	3	8441	11	8483	1
8405	3	8442	13	8484	9
8406	3	8443	13	8486	13
8407	3	S-8444	17	8487	21
8408	3	S-8445	1	8488	11
8409	3	8446	21	8489	11
8410	3	8448	21	8490	11
8411	3	8449	5	8491	11
8412	3	8452-A	5	8492-T	15
8414	11	S-8453	7	8493	23
8415	11	8454-A	7	8495	15
8416	11	8455	9	8496	15
S-8417	11	S-8456	5	8497	23
8420	13	8457	15	8498-A	5
8421	15	8458	15	8499	23
8422-A	13	8459	15	8501-4	23
8423-A	13	8460	15	8502	23
8424	13	8461	5	8503-1	21
S-8425	15	S-8462	5	8503-2	21
8427	15	8463	5	8504	15
8428	7	8464	5	8505	23
8429	15	8465	5	8510-AA	5
8430	15	8466-A	1	8514	11
8431	15	8467	9,23	10017-A	15
8432	15	8470	1	11152	5
8433	15	8472	5	11554	21
8434	1	8473	13	11557	21
8435	11	8474	5	* 98-A	3
8437-1	11	8475-C	5	* 132-C	3
8437-2	11	8476	5	* 8188	7
8437-3	11	8477	5	* 8055	7
8438	11	8479	15	* 4078	15
8439	11	8480-A	3	* 7012-A	21
				* AC-06	23

* Additioned parts from on 1988.4

From the library of: Superior Sewing Machine & Supply LLC

From the library of: Superior Sewing Machine & Supply LLC

From the library of: Superior Sewing Machine & Supply LLC

From the library of: Superior Sewing Machine & Supply LLC